Vibrating Table – Datasheet

Easier tamping – Improved filling uniformity

1. Product presentation

Model:

Serial:

Benefits

- Improved fill weight uniformity
- Easier tamping: no handling of the machine or of a tamper. Simply turn the vibrating table's knob.

These benefits will be more or less present depending on the type of powder.

Type of powder	Benefit
Sticky	If tamping sticky powder with a tamper tool, the powder will stick to the tamper and cause powder losses. The vibrations will allow the powder to fill the capsules fully and avoid loss by contact.
Bridging	Typically, very fine powders (flour-like) can form a bridge at the top of the capsule, giving the impression the capsule is full when in reality there is a gap inside. The vibrations will break that bridge and allow the capsule to become full.

2. Safety information and disclaimer

! Do not let the Vibrating Table enter in contact with water ! It contains electrical components that might malfunction or cause material damage or physical injury if in contact with water.

The vibrating table is heavy and might cause injury if mishandled or in case of fall.

Feton International sprl
8, rue de la Croix du Maïeur
7110 Strépy-Bracquegnies
Belgium

+32 (0) 2 420 52 00
contact@feton.com
www.feton.com

Always work on a stable and flat surface, at a height that is comfortable to work while standing. Have sufficient free space around the machine that you are working with.

The filling being manual, results may vary depending on the user. Other factors can influence the results such as but not limited to: type of power, number of tamps, filling weight, capsule size, vibration type and intensity. It is the responsibility of the user to make sure the prescribed dose is respected. Feton International is not responsible for wrong dosing.

Illustrations, descriptions and specifications are not contractual and are subject to change without prior notice. Warranty will be void if the Vibrating Table is opened.

Feton International sprl declines all liability in the event of improper use of its products.

3. Technical data

3.1 Components list and Materials

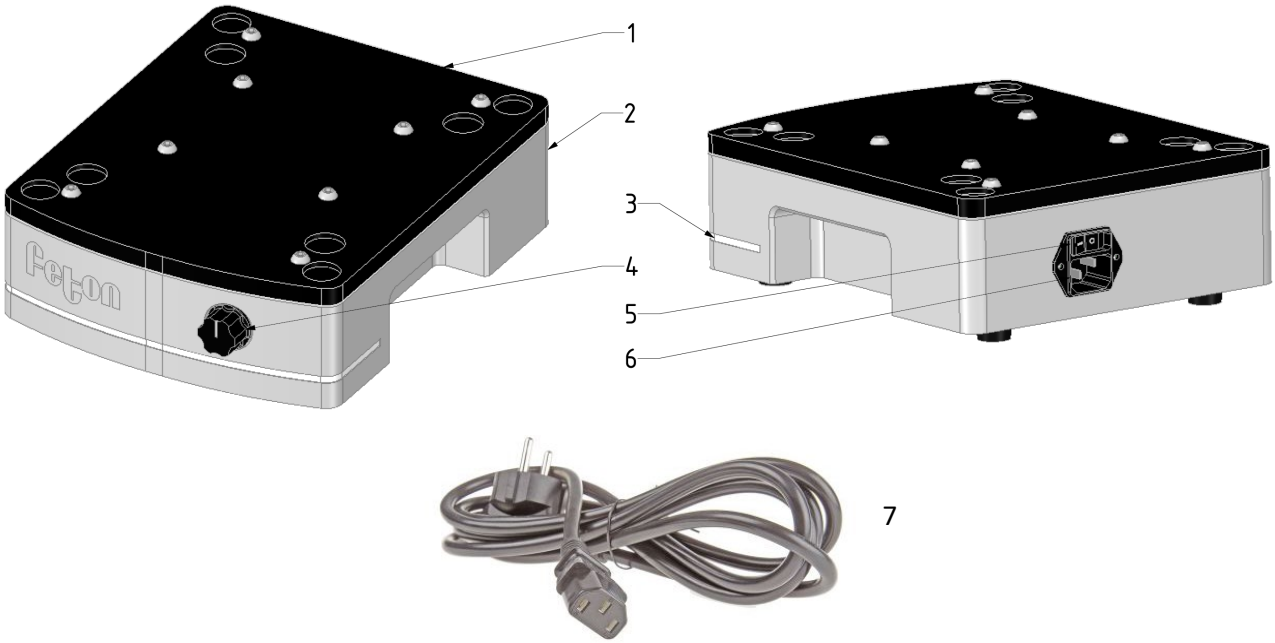

Item N°	Quantity	Name	Material
1	1	Top Plate	POM
2	1	Frame	Anodised Aluminium
3	1	LED Indicator	PMMA
4	1	Adjustment knob	/
5	1	Power button	/
6	1	Power plug	/
7	1	Power cable	/

3.2 Product Dimensions and Weight

(Capsule Fillers not included)

3.2.1 VIBRA-120

Weight : 4,4 kg

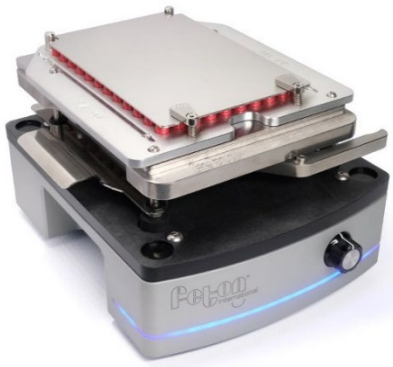

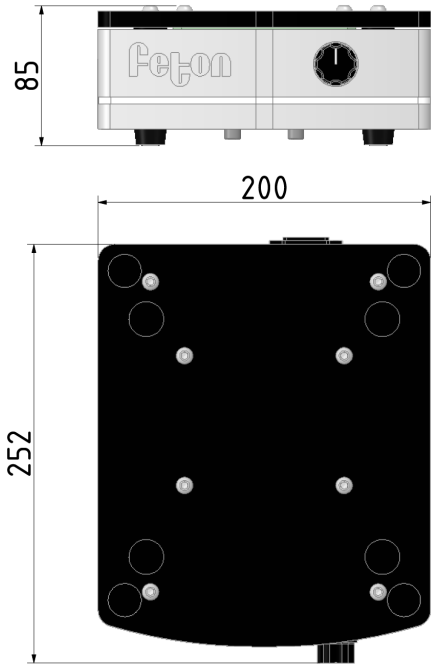

3.2.2 VIBRA-200

Weight : 4,7 kg

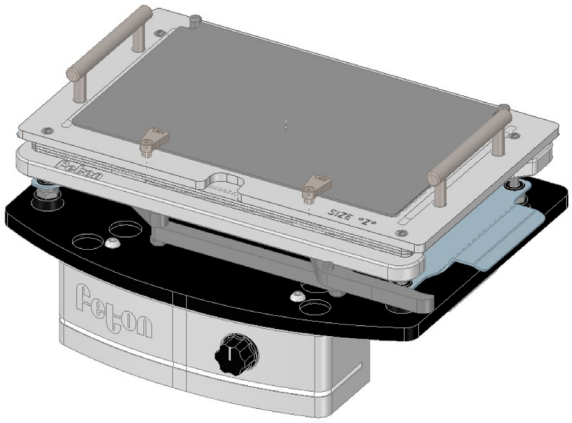

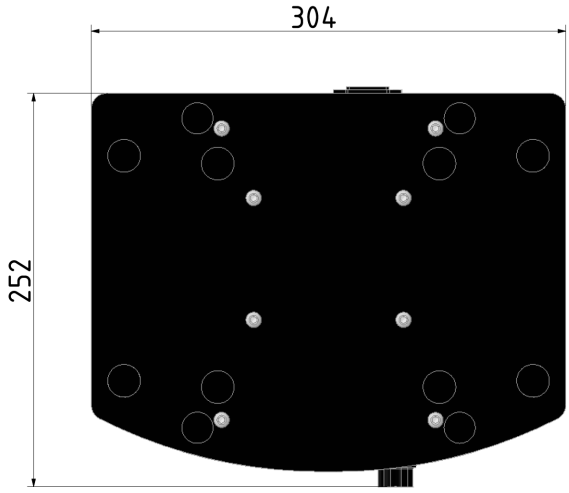

3.2.3 VIBRA-300

Weight : 6,1 kg

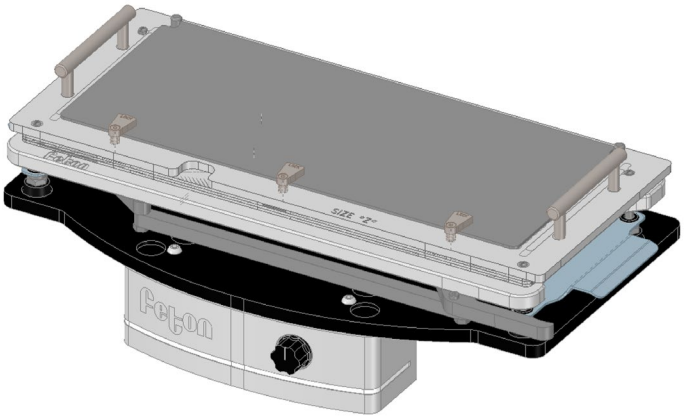

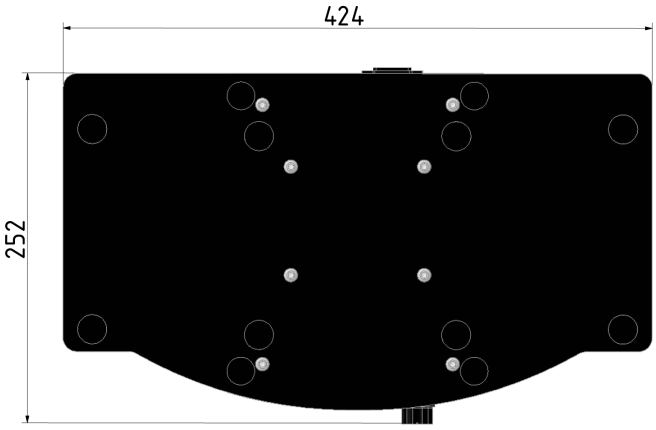

3.2.4 VIBRA-400

Weight : 6,1 kg

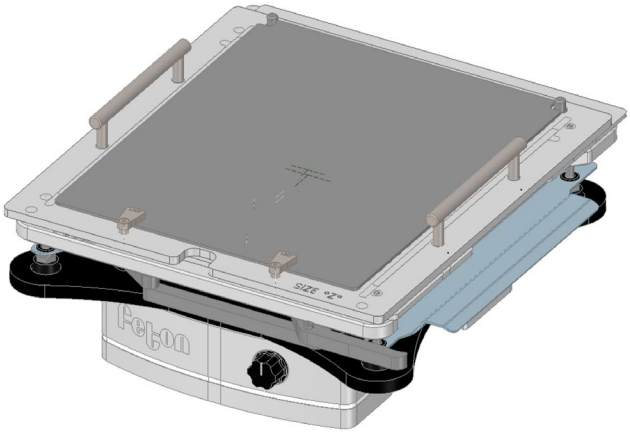

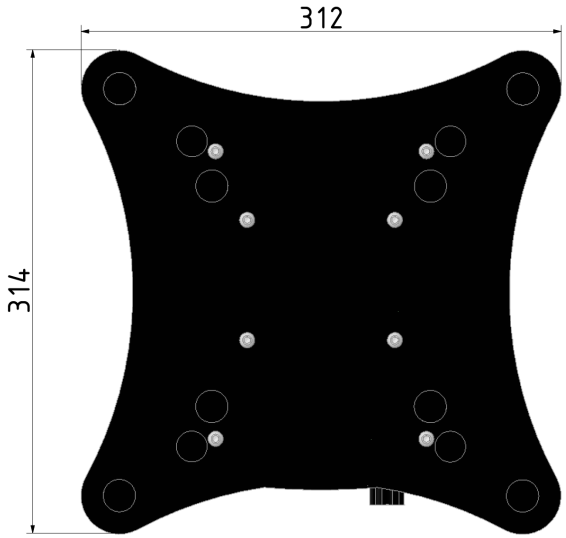

3. How to use

The use is similar for any size of capsule filler.

See table below for visual instructions.

1. Set the vibration to the lowest setting by turning the knob anti-clockwise.
2. Turn on the power button. The front LED will light up.
3. Fill your capsule Filler in the usual way and position it on the vibrating table.
4. Slowly turn the knob clockwise to increase vibrations until you find the setting you want. Let the vibrations pack the powder.
5. Turn off the knob to stop vibrations and repeat the filling operation if needed.

1

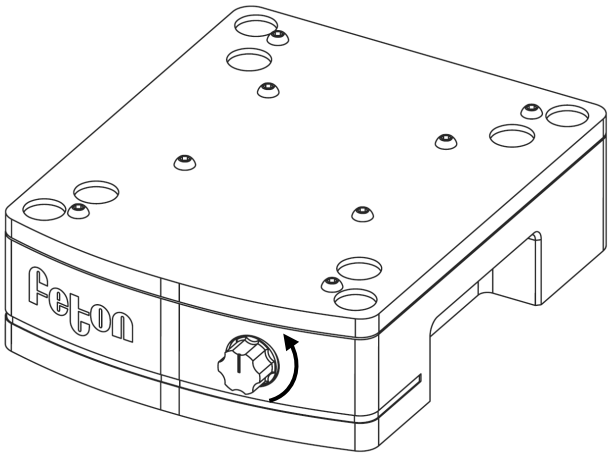

2

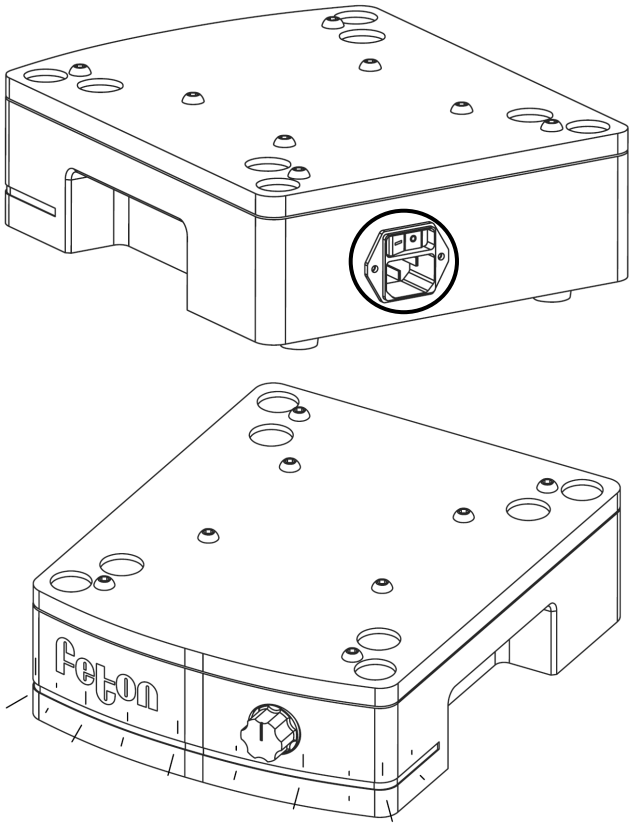

Feton International sprl
8, rue de la Croix du Maïeur
7110 Strépy-Bracquegnies
Belgium

+32 (0) 2 420 52 00
contact@feton.com
www.feton.com

3

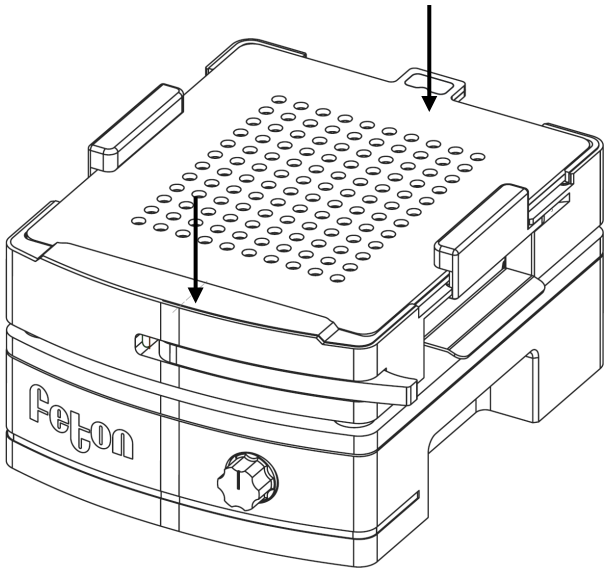

4

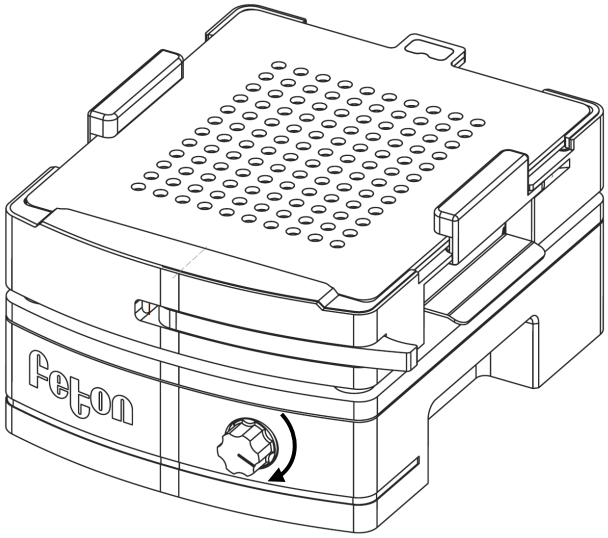

5

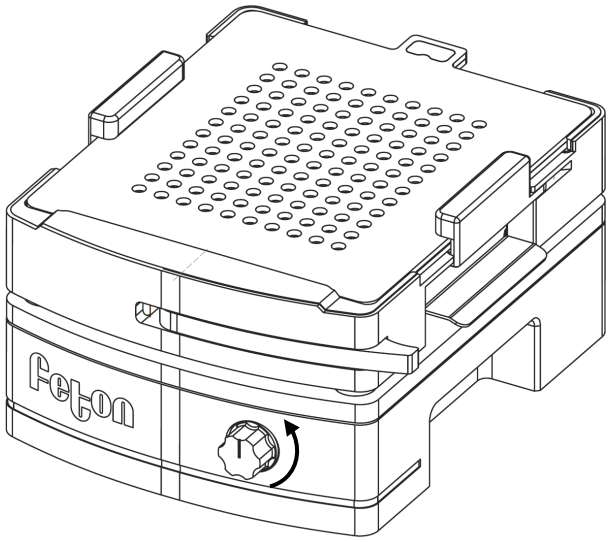

4. How to wash

Use a slightly damp cloth to wipe any stain on the vibrating table.

Be careful to not let any water penetrate inside the machine.

Feton International sprl
8, rue de la Croix du Maïeur
7110 Strépy-Bracquegnies
Belgium

+32 (0) 2 420 52 00
contact@feton.com
www.feton.com